JS5053 SWING GATE DIMENSION

JAVIN

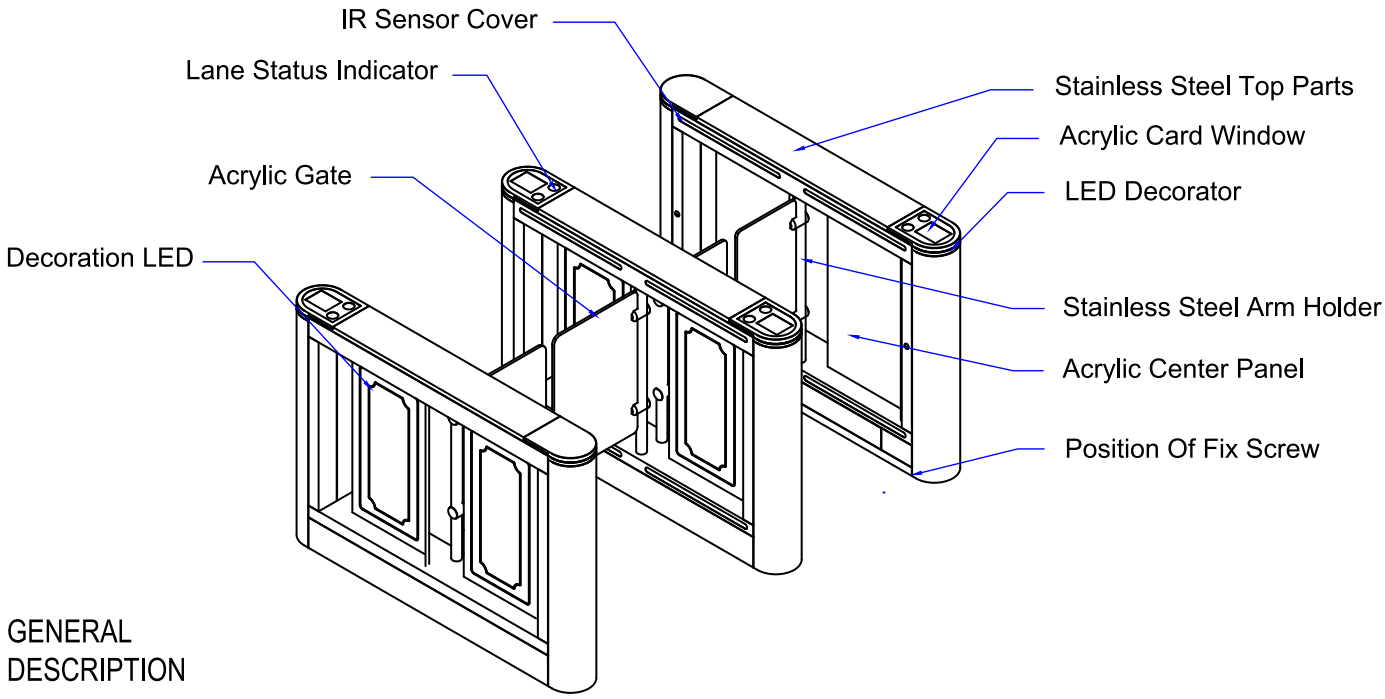

GENERAL DESCRIPTION

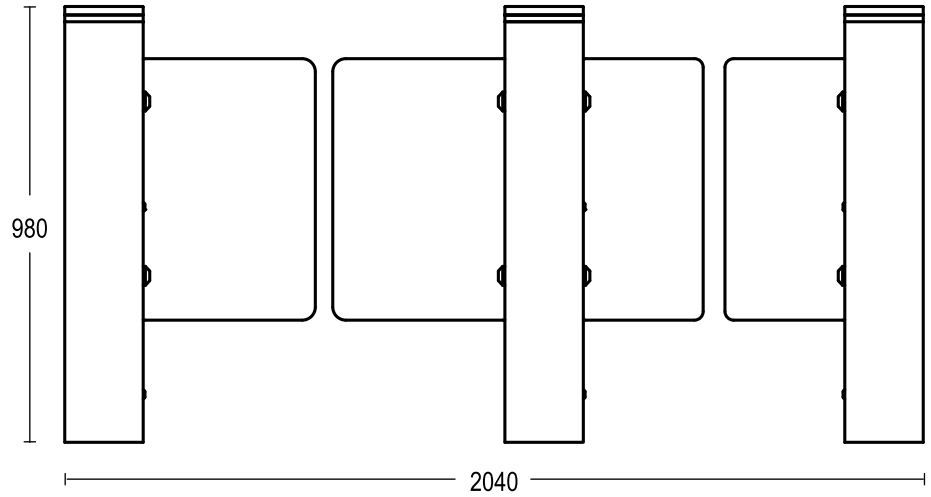

FRONT VIEW

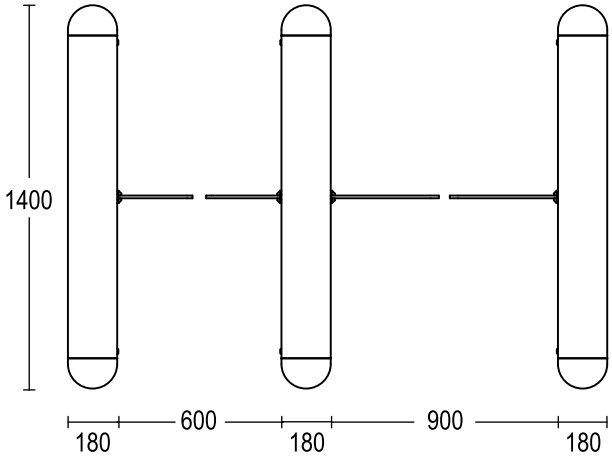

TOP VIEW

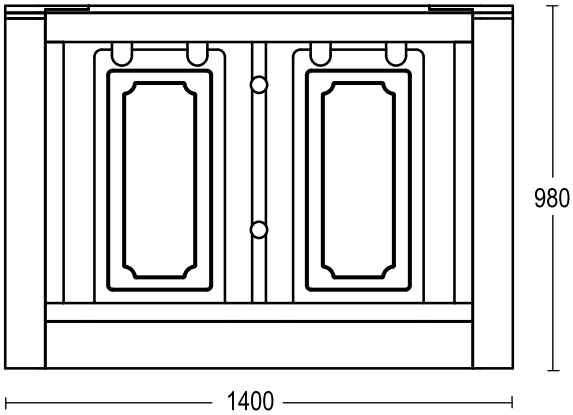

SIDE VIEW

*All specification, drawing and product info are subject to change without prior notice.